TESY

the comfort generation

2011

traditions

advantages

power

TESY

the **comfort** generation

comfort

creativity

products 2011

heating appliances

- Oil – Filled Radiators
- Panel Convectors
- Convectors
- BlackArt
- Fan Heaters
- Bathroom Fan Heaters
- Halogen Heaters
- Gas Heaters

storage water heaters

- Storage Water Heaters PREMIUM LINE
- storage water heaters BASE LINE
  - Vertical Models
  - Vertical Models with Serpentine
  - Horizontal Models
  - Horizontal Models with Serpentine
- Storage Water Heaters COMPACT LINE
- Instantaneous Water Heaters

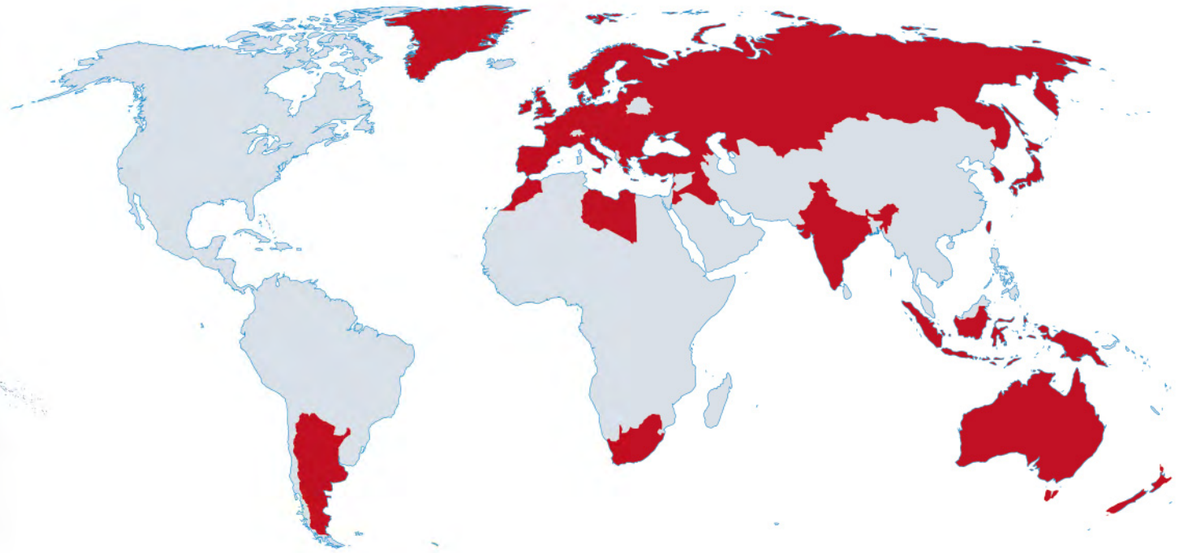

mission

Being young, open minded, dynamic and focused, **TESY** has the mission to create and manufacture better and affordable products by understanding consumers' needs evolution in home comfort, and by respecting the principles of correctness and partnership for the general welfare and prosperity.

vision

TESY to be a world leader in the home comfort appliances industry.

about the company

TESY Ltd. is a Bulgarian company founded in 1990 and is a part of FICOSOTA Holding. **TESY** is among the largest manufacturers of water heaters and domestic heating appliances and gas boilers in Europe.

Because of its highly motivated and experienced specialists, **TESY** is the most dynamically developing European company in its field – ranking as the largest manufacturer of oil-filled radiators in Europe and among the European top 6 electric storage water heater manufacturers.

TESY provides comfort to consumers in over 50 countries on 5 continents: Europe, Asia, Africa, Australia and South America. Due to the **TESY** brand name development and wide market presence the company gains significant market shares in several European countries and the Middle East. Some of the most important **TESY** markets are Romania, UK, Germany, Denmark, Croatia, Kuwait, Taiwan, Japan, Denmark, Serbia, Bulgaria etc.

TESY has 4 production sites located in North Eastern Bulgaria in the region of Shumen which has the benefits of highly developed infrastructure and proximity to major transport and communication highways as well as to a sea port.

TESY is among the best technically equipped companies in the field of heating, water heating and solar systems manufacturing. The company possesses a state-of-the-art line for electric storage water heater's tanks production based on the plasma welding method and fully automatic line for Glass Ceramic coating of **TESY** water heater tanks. It also possesses the most contemporary and fully automatic production line for electric oil-filled radiators, gas boilers and high capacity water heaters assembling with built-in stand for testing and quality control of 100% of the manufactured production.

TESY is certified and operates in compliance with the requirements of the ISO 9001/2000 international quality management standard covering the design, manufacturing and maintenance of electric household appliances.

The Trade Mark **"TESY – the comfort generation"** is registered in 42 countries and it reflects the company aspiration for perfection in servicing its customers.

TESY
the comfort generation

Oil-filled radiators HEAT MACHINE

MAXIMUM POWER IN SMALL SIZE!

HEAT MACHINE

Design without sharp edges

Adjustable room thermostat

3 power settings

Timer

Built-in fan heater

Cord Storage

Easy-fit-in castors

Over 30% higher level of convective heat exchange, compared to an convectional radiator
- The unique deisgn of HEAT MACHINE creates the so-called chimney effect, which helps to increase the hot air circulation in the room. The faster flow of hot air creates powerful convection.

Faster heating of the room
- HEAT MACHINE has 81% greater heating surface per fin in comparison with the conventional radiators, which allows faster heating of the room and ensures the desired comfort temperature.

3 power levels
- Create convenience and economy while using the device in periods of higher temperature, when the maximum capacity of the device is not necessary.

High safety level
- The highest working temperature of HEAT MACHINE is concentrated at the device's inner surface, and the area is not touchable for human hand.
- Unique construction shape, with external flat surface, caring for your safety.

> All models are equipped with switch with indicator light, anti-freezing protection and thermal cut off.

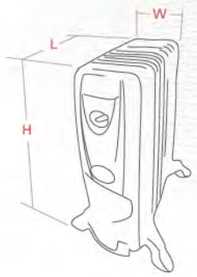

technical characteristics / transport norms

MODELS	Rated voltage	Rated power [W] Max.	Mid.	Min.	Fan	Number of fins	Cord storage	Timer	Product dimensions [m] H	W	L	Weight (net) [kg]	For room up to [m³]	Truck 86 m³ [pcs]	1x20′ cnt. [pcs]	1x40′ HC cnt. [pcs]	Products per pallet
LB 1506 E04 TRV	230V~50Hz	1500	900	800	500	6	+	+	0.645	0.314	0.335	12.40	42 - 49	1357	580	1411	36
LB 2007 E04 TRV	230V~50Hz	2000	1200	800	500	7	+	+	0.645	0.314	0.375	14.20	52 - 60	1270	525	1277	36
LB 2509 E04 TRV	230V~50Hz	2500	1500	1000	500	9	+	+	0.645	0.314	0.455	17.09	62 - 67	1046	441	1073	30

The design and technical data specified in the catalogue are subject of change without notice.

CE

TESY
the comfort generation

Design without sharp edges

Adjustable room thermostat

3 power settings

Cord storage

Oil-filled radiators – CC series

Over 25% higher level of convected heat distribution in comparison with the conventional radiators
- The unique deisgn of CC oil-filled radiator helps to increase the hot air circulation in the room. The faster flow of hot air creates powerful convection.

Faster room heating
- CC oil-filled radiator has 35% higher heat exchange area per fin in comparison with convectional oil-filled radiators, which allows faster heating of the room and ensures the desired comfort temperature.

High safety level
- The radiator provides highest level of user's safety thanks to low outer surface temperature. The highest working temperature in CC oil-filled radiator is concentrated in the device's inner surface, and the area is not touchable for human hand.
- Unique construction shape, with external flat surface, caring for your safety.

> All models are equipped with switch with indicator light, anti-freezing protection and thermal cut off.

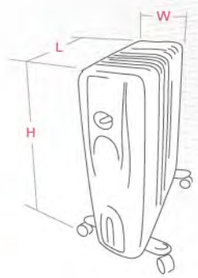

technical characteristics / transport norms

MODELS	Rated voltage	Rated power [W] Max.	Mid.	Min.	Fan	Number of fins	Cord storage	Timer	Product dimensions [m] H	W	L	Weight (net) [kg]	For room up to [m³]	Truck 86 m³ [pcs]	1x20' cnt. [pcs]	1x40' HC cnt. [pcs]	Products per pallet
CC 2008 E 05 R	230V~50Hz	2000	1200	800	-	8	+	-	0.600	0.160	0.390	12.85	47 - 55	1440	520	1230	36
CC 2510 E 05 R	230V~50Hz	2500	1500	1000	-	10	+	-	0.600	0.160	0.470	15.21	57 - 62	1220	440	1040	33
CC 3012 E 05 R	230V~50Hz	3000	1800	1200	-	12	+	-	0.600	0.160	0.550	17.00	65 - 70	1060	380	900	27

The design and technical data specified in the catalogue are subject of change without notice.

CE

Oil-filled radiators – CB series

Adjustable room thermostat

3 power settings

Timer

Built-in fan heater

Cord storage

- State-of-the-art design
- 3 power settings
- Adjustable room thermostat
- Anti-freeze protection
- Energy-saving
- Silent operation
- Fast heating
- Convectional and radiant heating effect
- Convenient cord storage
- Models with 24-h timer
- Models with fan heater

> All models are equipped with switch with indicator light, anti-freezing protection and thermal cut off.

TESY
the comfort generation

Circulation of warm air:
- 80% of the heat produced by TESY radiators is in the form of convective thermal exchange while 20% of the heat is in the form of radiant heating. Because of this balance TESY radiators are considered to be amongst the most effective household electric radiators on the market.

Adjustable Room thermostat:
- Thanks to the built-in thermostat, TESY radiators maintain the desired temperature in the room.

Timer:
- The 24-Hour Timer means optimal energy-saving heating adjustment for the whole day.

Built-in fan heater:
- Helps for the faster heating of the room and considerably improves the convective heat exchange through constant input of hot air.

Cord storage:
- Provides additional convenience both in transportation and in storing the device.

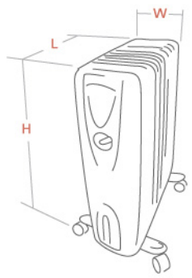

E01 R

E01 TR

E01 V

technical characteristics / transport norms

MODELS	Rated voltage	Rated power [W] Max.	Mid.	Min.	Fan	Number of fins	Cord storage	Timer	Product dimensions [m] H	W	L	Weight (net) [kg]	For room up to [m³]	Truck 86 m³ [pcs]	1x20′ cnt. [pcs]	1x40′ HC cnt. [pcs]	Products per pallet
CB 1507 E01 R	230V~50Hz	1500	900	600	-	7	R	-	0.645	0.286	0.350	10.12	23-31	1635	575	1430	36
CB 2009 E01 R	230V~50Hz	2000	1200	800	-	9	R	-	0.645	0.286	0.430	12.19	34-44	1360	480	1190	24
CB 2511 E01 R	230V~50Hz	2500	1500	1000	-	11	R	-	0.645	0.286	0.510	14.25	42-55	1165	410	1020	24
CB 2512 E01 R	230V~50Hz	2500	1500	1000	-	12	R	-	0.645	0.286	0.550	15.29	47-57	1085	385	950	21
CB 3014 E01 R	230V~50Hz	3000	1800	1200	-	14	R	-	0.645	0.286	0.630	16.47	58-63	955	340	840	21
CB 2009 E01 TR	230V~50Hz	2000	1200	800	-	9	R	24-h	0.645	0.286	0.430	10.62	34-44	1360	480	1190	24
CB 2512 E01 TR	230V~50Hz	2500	1500	1000	-	12	R	24-h	0.645	0.286	0.550	12.69	47-57	1090	385	950	21
CB 2009 E01 V	230V~50Hz	2000	1200	800	500	9	-	-	0.645	0.286	0.430	10.46	47-57	1355	480	1190	24
CB 2512 E01 V	230V~50Hz	2000	1200	800	500	12	-	-	0.645	0.286	0.550	12.53	47-57	1085	385	950	21

The design and the technical data specified in the catalogue are subject of change without notice.

CE

TESY
the comfort generation

Panel convectors TESY

Fast and comfort heating

Safety thermostat

Control Panel

Compact size

- **Control Panel**
  - Switch ON/OFF and adjustable thermostat ensure the convenient use of the convector and creates comfort at home.
- **Safety thermostat**
- **Silent operation**
- **IP24 safety class**
  - All TESY panel convectors are suitable for bathroom installation.
- **Fast room heating**
  - The TESY convectors are designed to improve the circulation of warm air in the room through high speed of heat distribution.
- **Slim Design**
  - Due to the slim design of TESY convectors require less room space.
- **Anti-freeze protection**

>All models are equipped with switch with indicator light, anti-freezing protection and thermal cut off.

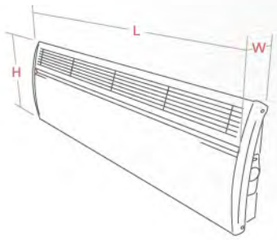

technical characteristics / transport norms

MODELS	Rated voltage	Rated power [W]	Built-in fan heater	Adjustable room thermostat	Safety thermostat	IP safety class	Product dimensions [m] H	W	L	Weight (net) [kg]	For room up to [m³]	Truck 86 m³ [pcs]	Truck 116 m³ [pcs]	1x20' cnt. [pcs]	1x40' HC cnt. [pcs]
CN 02 050 MAS	220V~50Hz	500	-	+	+	IP24	0.400	0.105	0.430	3.4	up to 15	2145	2730	960	2150
CN 02 100 MAS	220V~50Hz	1000	-	+	+	IP24	0.400	0.105	0.550	4.0	15 - 30	1650	2100	770	1735
CN 02 150 MAS	220V~50Hz	1500	-	+	+	IP24	0.400	0.105	0.620	4.4	30 - 45	1551	1974	685	1640
CN 02 200 MAS	220V~50Hz	2000	-	+	+	IP24	0.400	0.105	0.770	5.4	45 - 60	1320	1680	560	1300
CN 02 250 MAS	220V~50Hz	2500	-	+	+	IP24	0.400	0.105	0.950	6.4	60 - 70	1023	1302	460	1040

The design and the technical data specified in the catalogue are subject of change without notice.

CE

TESY
the comfort generation

Convectors

MICA heating element

Easy-fit-in castors

Adjustable room thermostat

2 power settings

MC 201

- Powerful infra-red heating
- 2 power settings 1000/2000 W
- Silent operation
- Safety thermostat
- Adjustable room thermostat
- Built-in tip over switch
- Anti-freeze protection

Adjustable room thermostat

2 power settings

Anti-freeze protection

CN 201 ZF

- Fast heating
- 2 power settings 1000/2000 W
- Silent operation
- Safety thermostat
- Adjustable room thermostat
- Anti-freeze protection
- Built-in fan

Adjustable room thermostat

4 power settings

Over heating protection

Safety fuse

Anti-freeze protection

CN 202 ZF

- Fast heating
- 4 power settings
- Built-in "TURBO" fan
- Adjustable room thermostat
- Safety thermostat
- Safety fuse
- Silent operation
- Anti-freeze protection
- Rubber power cord

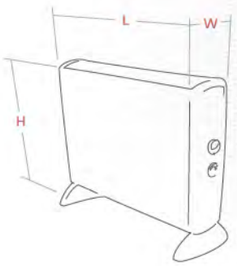

technical characteristics

MODELS	Rated voltage	Rated power [W] Max.	Rated power [W] Min.	Adjustable room thermostat	Fan	MICA heating element	Safety thermostat	Safety metal grid	Colours	Product dimensions [m] H	Product dimensions [m] W	Product dimensions [m] L	Weight (net) [kg]	For room up to [m³]
MC 201	220V~50Hz	2000	1000	+	-	+	+	+	White	0.580	0.262	0.802	6.5	36 - 42
CN 201 ZF	220V~50Hz	2000	1000	+	+	-	+	-	Black - White	0.450	0.210	0.705	4.7	36 - 42
CN 202 ZF	230V~50Hz	2000	800	+	2000+ 800+	-	+	-	White	0.450	0.150	0.710	3.0	40

transport norms

	Truck 86 m³ [pcs]	Truck 116 m³ [pcs]	1x20' cnt. [pcs]	1x40' HC cnt. [pcs]
Master box (2 pcs in MB)	680	870	240	590
Single items	1500	1900	560	1300
Single items	1800	2300	650	1500
Single items	1720	2320	600	1420

The design and the technical data specified in the catalogue are subject of change without notice.

CE

TESY
the comfort generation

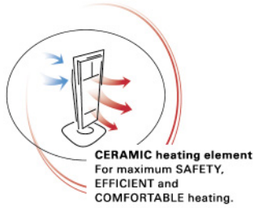

Fan heater
BLACK ART series

BLACK Art

■> Rated power 2500 W

■> Control panel
- Two power settings 1300/2500 W and the built-in safety device provide convenient exploitation of the appliance and home comfort. The unit is equipped with LED display and TOUCH sensor switch, which gives you the possibility to adjust Power settings, Timer, Fan Settings.

■> Built-in inlet filter

■> Oscillating function – 90°

■> Tip-over switch (cuts off the heating element when the unit falls)

■> 7.5 hours Timer
- The Timer function gives you the possibility to set the work time of the appliance from 0 to 7.5 hours and the heater will switch off when the set time expires.

■> TOUCH sensor switch

■> Safety grid

■> Convenient handle

■> Mechanical Safety switch

■> Ceramic heating element PTC
- PTC (positive temperature coefficient) heating element is made by special metalized ceramic material (based on barium titanate) and it has self limiting temperature characteristics. PTC appliances are energy saving. The heater provides lower operating cost because the wattage constantly varies from min to max based on the temperature required.

2 power settings

Built-in inlet filter

Oscillating function 90°

Tip-over switch

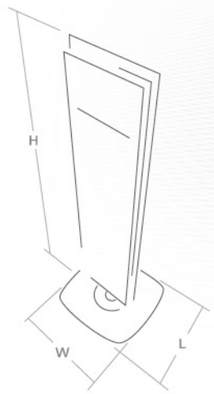

technical characteristics

MODELS	Rated voltage	Rated power [W] Max.	Rated power [W] Min.	Adjustable room thermostat	Oscillating function	Safety thermostat	Ceramic heating element PTC	Colours	Product dimensions [m] H	W	L	Weight (net) [kg]	For room up to [m³]
HL 293 V PTC	230V~50Hz	2500	1300	+	+	+	+	Black + glass periphery	0.807	0.256	0.246	4.7	42 - 49

transport norms

	Truck 86 m³ [pcs]	Truck 116 m³ [pcs]	1x20′ cnt. [pcs]	1x40′ HC cnt. [pcs]
Master box (2 pcs in MB)	930	1190	330	820
Single items	1500	1900	550	1330

The design and the technical data specified in the catalogue are subject of change without notice.

CE

TESY
the comfort generation

Adjustable room thermostat

Silent operation

Safety grille

2 power settings

Anti-freeze protection

Fan heaters

HL 296 V

- Metal safety grille
- Adjustable room thermostat
- 2 power settings 1000/2000 W
- Anti-freeze protection
- Function "Summer cooling"
- Light weight and compact size
- Light indicator
- Convenient handle

Adjustable room thermostat

Silent operation

2 power settings

HL 211 V

- 2 power settings 1000/2000 W
- Anti-freeze protection
- Light indicator
- Function "Summer ventilation"
- Light weight and compact size

HL 200 H

- 2 power settings 1000/2000 W
- Anti-freeze protection
- Function "Summer ventilation"
- Light weight and compact size
- Upper suction preventing dust accumulation

HL 296 V

HL 211 V

HL 200 H

HL 296 V

HL 211 V

HL 200 H

TESY
the comfort generation

Fan heaters
with ceramic heating element

Remote control

Electronic control unit

Timer

2 power settings

HL 276 W PTC

- Remote control
- Powerful convection of hot air
- Wall mounting
- Ceramic heating element PTC
- 2 power settings 1000/2000 W
- Cool / Warm / Hot air operation modes
- Over-heating protection
- LED display showing room temperature
- 7.5 hour timer
- Light indicator

HL 276 W PTC

Electronic control unit

Oscillating function 90°

2 power settings

Tip-over switch

HL 253 V PTC

- Metal grid
- 2 power settings 900/1800 W
- Ceramic heating element PTC
- 4 operation modes –
  High / Low / Auto / Fan Setting
- Electronic safety thermostat
- Tip-over switch (cuts off the heating element when the unit falls)
- Oscillating function
- Anti-freeze protection
- Convenient handle

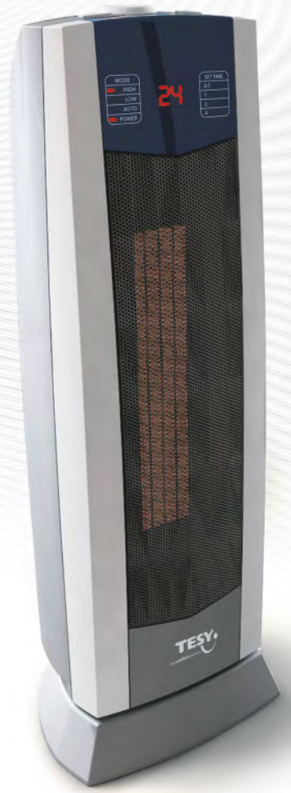

HL 253 V PTC

HL 276 W PTC

HL 253 V PTC

Ceramic heating element PTC

PTC (positive temperature coefficient) heating element is made by special metalized ceramic material (based on barium titanate) and it has self limiting temperature characteristics.
The Ceramic heating element has two heating principles, working simultaneously: Powerful infra-red heat distribution and convection. Because of the infra-red heat distribution, the appliance warms up the surrounding walls, objects and furniture, which on their part warm up the interior of the premises. These appliances are economical because of the temperature characteristics of the ceramic material, which allow variation in the strength of the material when the environment temperature changes and in this way the amount of electric current which passes through the material with the purpose of maintaining the temperature set in advance, varies.

TESY
the comfort generation

Fan heaters
with ceramic heating element

Adjustable room thermostat
Built-in inlet filter
Tip-over switch
2 power settings

HL 261 V PTC

- Uniform distribution of hot air
- Metal grid
- 3 ceramic heating elements PTC
- 2 power settings 1050/1800 W
- Anti-freeze protection
- Over-heating protection
- Tip-over switch
- Light indicator
- Built-in filter
- Function "Summer ventilation"

Adjustable room thermostat
Metal grid
2 power settings

HL 231 V PTC

- Metal grid
- Ceramic heating element PTC
- 2 power settings 900/1800 W
- Anti-freeze protection
- Function "Summer cooling"
- Light weight and compact size
- Light indicator

Adjustable room thermostat
Silent operation
2 power settings

HL 221 H PTC

- Innovative design
- Ceramic heating element PTC
- Metal grid
- 2 power settings 900/1800 W
- 45° tilt for maximum heat distribution
- Anti-freeze protection
- Function "Summer cooling"
- Light weight and compact size
- Light indicator

HL 261 V PTC

HL 231 V PTC

HL 221 H PTC

Ceramic heating element PTC

PTC (positive temperature coefficient) heating element is made by special metalized ceramic material (based on barium titanate) and it has self limiting temperature characteristics.
The ceramic heating element has two heating principles, working simultaneously: Powerful infra-red heat distribution and convection. Because of the infra-red heat distribution, the appliance warms up the surrounding walls, objects and furniture, which on their part warm up the interior of the premises. These appliances are economical because of the temperature characteristics of the ceramic material, which allow variation in the strength of the material when the environment temperature changes and in this way the amount of electric current which passes through the material with the purpose of maintaining the temperature set in advance, varies.

technical characteristics

MODELS		Rated voltage	Rated power [W] Max.	Rated power [W] Min.	Adjustable room thermostat	Function "Summer cooling"	Safety thermostat	Heating element	Colours	Product dimensions [m] H	W	L	Weight (net) [kg]	For room up to [m³]
HL 296 V		230V~50Hz	2000	1000	+	+	+	Resistence Wire	Light Grey; Orange	0.234	0.224	0.254	1.20	34 - 39
HL 211 V		230V~50Hz	2000	1000	+	+	+	Resistence Wire	Blue; White	0.256	0.156	0.196	1.40	21 - 25
HL 200 H		230V~50Hz	2000	1000	+	+	+	Resistence Wire	Light / Dark Grey; Silver; Blue Metallic	0.147	0.247	0.242	1.25	36 - 42
HL 276 W PTC		230V~50Hz	2000	1000	+	-	+	Ceramic	Silver	0.150	0.245	0.560	2.70	36 - 42
HL 253 V PTC		230V~50Hz	1800	900	+	-	+	Ceramic	Light / Dark Grey	0.546	0.195	0.190	7.94	36 - 42
HL 261 V PTC		230V~50Hz	1800	1050	+	+	+	Ceramic	Black; Silver	0.312	0.213	0.289	2.40	34 - 39
HL 231 V PTC		230V~50Hz	1800	900	+	+	+	Ceramic	Light / Dark Grey; Silver	0.265	0.190	0.214	2.00	34 - 39
HL 221 H PTC		230V~50Hz	1800	900	+	+	+	Ceramic	Light Grey Metallic	0.245	0.220	0.330	3.00	34 - 39

transport norms

	Truck 86 m³ [pcs]	Truck 116 m³ [pcs]	1x20' cnt. [pcs]	1x40' HC cnt. [pcs]
HL 296 V — Matser box (4 pcs in MB)	1190	1520	430	1020
HL 296 V — Single items	5800	7400	2100	5100
HL 211 V — Matser box (8 pcs in MB)	1400	1790	500	1230
HL 211 V — Single items	9300	11800	3300	8100
HL 200 H — Matser box (8 pcs in MB)	875	1250	285	760
HL 200 H — Single items	7000	10000	2280	6080
HL 276 W PTC — Matser box (4 pcs in MB)	840	1080	300	740
HL 276 W PTC — Single items	3700	4800	1360	3300
HL 253 V PTC — Matser box (2 pcs in MB)	1180	1500	420	1020
HL 253 V PTC — Single items	2600	3400	960	2300
HL 261 V PTC — Matser box (4 pcs in MB)	800	1030	290	700
HL 261 V PTC — Single items	4000	5100	1450	3500
HL 231 V PTC — Matser box (6 pcs in MB)	950	1260	350	850
HL 231 V PTC — Single items	7100	9100	2590	6300
HL 221 H PTC — Matser box (4 pcs in MB)	860	1100	300	750
HL 221 H PTC — Single items	3200	4100	1160	2800

The design and the technical data specified in the catalogue are subject of change without notice.

TESY
the comfort generation

Bathroom heaters

Adjustable room thermostat

2 power settings

Anti-freeze protection

HL 241 VB

- Bathroom installation
  - IP24 safety class
- Wall mounting
- Towel holder
- Modern and compact design
- 2 power settings 1000/2000 W
- Fast and comfort heating
- Anti-freeze protection
- Safety thermostat

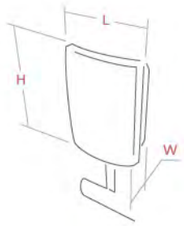

Adjustable room thermostat

3 power settings

IP24 safety class

HL 242 VB PTC

- Bathroom installation
  - IP24 safety class
- Wall mounting
- 3 power settings 800/1400/2000 W
- Fast and comfort heating
- Anti-freeze protection
- Safety thermostat

Safety system

Over-heating protection

Wall mounting

IP24 safety class

QH 01 180

- Wall mounting
- 3 power settings 1800/1200/600 W
- Power setting display
- Quartz heating element
- Over-heating protection
- 45° tilt facility function for changing the angle of heat distribution
- Pull cord switch

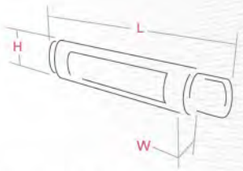

HL 241 VB

HL 242 VB PTC

QH 01 180

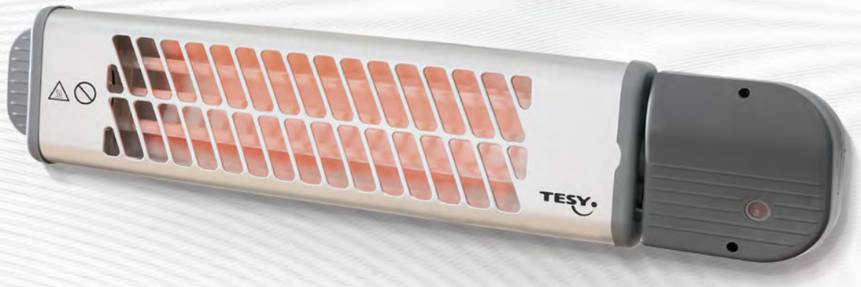

technical characteristics

MODELS	Rated voltage	Rated power [W] Max.	Mid.	Min.	Adjustable room thermostat	Safety thermostat	Heating element	Towel holder	Colours	Product dimensions [m] H	W	L	Weight (net) [kg]	For room up to [m³]
HL 241 VB	230V~50Hz	2000		1000	+	+	Wired	+	Light Grey; Black	0.313	0.112	0.420	3.00	31 - 36
HL 242 VB PTC	230V~50Hz	2000	1400	800	+	+	PTC	-	White; Grey	0.380	0.260	0.145	2.00	40
QH 01 180	230V~50Hz	1800	1200	600	-	+	Quartz	-	Dark Grey; Silver	0.150	0.100	0.650	1.66	31 - 36

transport norms

	Truck 86 m³ [pcs]	Truck 116 m³ [pcs]	1x20' cnt. [pcs]	1x40' HC cnt. [pcs]
Master box (4 pcs in MB)	1000	1290	350	860
Single items	4500	5700	1600	3900
Single items	3127	4218	1080	2300
Master box (6 pcs in MB)	1140	1450	400	1000
Single items	7900	10100	2800	6900

The design and the technical data specified in the catalogue are subject of change without notice.

CE

TESY
the comfort generation

Halogen heaters

2 power settings

Halogen heating element

Oscillating function 70°

Noiseless

Safety metal grid

Tip-over switch

- Much more powerful infra-red heat distribution
- Convenient handle
- Fast and comfort heating
- Halogen heating element
- Noiseless
- Oscillating function - 70°
- 2 power settings 1200/600 W
- Tip-over switch

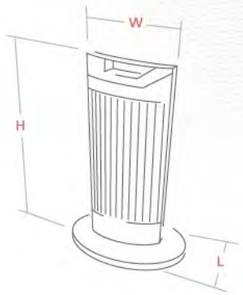

technical characteristics / transport norms

MODELS	Rated voltage	Rated power [W] Max.	Rated power [W] Min.	Adjustable room thermostat	Function "Summer cooling"	Tip-over switch	Heating element	Colours	Product dimensions [m] H	Product dimensions [m] W	Product dimensions [m] L	Weight (net) [kg]	For room up to [m³]	Truck 86 m³ [pcs]	Truck 116 m³ [pcs]	1x20' cnt. [pcs]	1x40' HC cnt. [pcs]
QH 02 120	230V~50Hz	1200	600	-	-	+	Halogen	Silver	0.700	0.380	0.240	2.5	24	2150	2900	800	1870

The design and the technical data specified in the catalogue are subject of change without notice.

CE

TESY
the comfort generation

Gas heater

Front heating panel

Control panel

Piezoelectric switch-on

Ergonomic handles

Heating element
- TESY gas heaters are equipped with 3 heating plates made of micro perforated ceramic material with excellent thermal resistance.

Control panel
- Functional and convenient control panel with 3 power settings and piezoelectric switch-on.

Ergonomic handles
- Ergonomic handles and castors ensure maximum comfort when moving the appliance. The easy-carrying option, makes gas heater TESY mobile and practical for usage in different premises.

Triple safety system

1. Safety system which cuts-off the gas supply if the concentration of CO_2/CO (carbon dioxide and carbon gas) accidentally exceeds 1.5%.
2. Flame monitoring system which cuts off the gas supply in case the flame diminishes or goes out.
3. TESY full front protection grid against direct contact of the objects or parts of the body with the flame or reflector.

Piezoelectric switch-on

Easy Folding platform
- TESY gas heaters are equipped with unique mechanism "Folding platform". During the exploitation of the gas heater, the surface of the folding platform can be used for gas tank storage. For this purpose, the platform is equipped with castor which guarantees the mobility and stability of the appliance. The "Folding platform" can be easily fold up, thus the size of the gas heater reduces significantly and facilitates the appliance storage.

Fast heating

Soft design without sharp edges

Light weight and easy movement

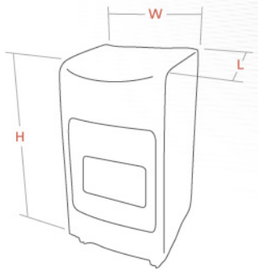

technical characteristics

MODELS	Rated power [W] Max.	Mid.	Min.	Min. gas consumption [g/h]	Max. gas consumption [g/h]	Gas category	Gas type	O_2 analyser	Piezoelectric switch-on	Product dimensions [m] H	W	L	Weight (net) [kg]	For room up to [m³]
LD 168 D	4200	2900	1550	145	305	I 3B/P	G30/31	+	+	0.736	0.432	0.280	7.4	90 - 100

transport norms

MODELS	Truck 86 m³ [pcs]	Truck 116 m³ [pcs]	1x20′ cnt. [pcs]	1x40′ HC cnt. [pcs]
LD 168 D	690	850	250	600

The design and the technical data specified in the catalogue are subject of change without notice.

CE

TESY
the comfort generation

Precise electronic control

Magnesium anode

Anode tester

High efficient thermo-insulation

PREMIUM Line
Electric storage water heaters with mechanical and electronic control

- **Glass-ceramic protection**
- **Electronic control / Mechanical control**
  - Accurate electronic thermostat
  - Precise settings of the maximum temperature (accuracy ± 1°C)
  - Digital thermoindicator with accuracy ± 1°C (LED display)
  - ON/OFF switch
  - Anode tester (checks the Magnesium anode status)
  - Self-Diagnostic system and alarm indication
- **Digital thermoindicator / Analog thermoindicator**
- **Magnesium anode with 5 years of useful life + Anode tester**
  - TESY Premium Line electric storage water heaters are equipped with Anode tester which is a helpful device showing the real condition of the anode and the necessity of its replacement. The magnesium anode protects the water heater tank from electrochemical corrosion.
- **High efficient thermo-insulation**
  - Efficient thermo-insulation from high density CFC-free polyurethane with 32 mm thickness guarantees minimum heat losses and energy saving operation.
- **Outgoing hot-water stainless steel outlet**
- **Incoming cold-water diffuser**
- **Flange allowing easy maintenance of the water heater**
- **Safety valve**

> All models are equipped with anti-freezing protection, thermal cut off and light indicator Switch ON/OFF.

P61 **P62**

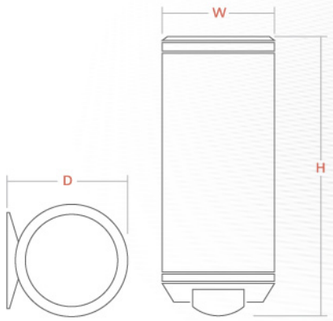

glass ceramic protection
CAPILLARY THERMOSTAT
PLASMA welding

technical characteristics / transport norms

MODELS	Rated voltage	Rated power [W]	Installation	Capacity [liters]	Diameter [mm]	Working pressure	Protection of the tank	Insulation [mm]	Switch ON/OFF	Thermo-indicator	Safety valve	Product dimensions [m] H	W	D	Weight (net) [kg]	Truck 86 m³ [pcs]	Truck 116 m³ [pcs]	1x20′ cnt. [pcs]	1x40′ HC cnt. [pcs]
GCV 8047 20 P61/P62	230V~50Hz	2000	Vertical	80	470	0.8 MPa	Glass ceramic	32	+	+	+	0.776	0.470	0.490	22.4	336	470	125	283
GCV 10047 20 P61/P62	230V~50Hz	2000	Vertical	100	470	0.8 MPa	Glass ceramic	32	+	+	+	0.923	0.470	0.490	24.9	305	425	110	245
GCV 12047 20 P61/P62	230V~50Hz	2000	Vertical	120	470	0.8 MPa	Glass ceramic	32	+	+	+	1.072	0.470	0.490	29.3	264	365	90	210
GCV 15047 20 P61/P62	230V~50Hz	2000	Vertical	150	470	0.8 MPa	Glass ceramic	32	+	+	+	1.293	0.470	0.490	35.0	225	305	75	176

The design and the technical data specified in the catalogue are subject of change without notice.

CE

TESY
the comfort generation

Adjustable thermostat

High efficient thermo-insulation

Anode protector

Anode tester
(only for models A04)

Moisture proof switch

BASE Line
Electric storage water heaters
Vertical models

Glass-ceramic protection of the water tank
- TESY electric storage water heaters are produced by the latest modern technology of glass-ceramic coating of the water tank. The glass-ceramic protection assures reliable protection against corrosion together with perfect hygiene of the water and guarantees long useful life of the water tank.

High efficient thermo-insulation
- High efficient thermo-insulation from high density CFC-free polyurethane with 18 mm thickness guarantees minimum heat losses and energy saving operation.

Reliable electric system, guaranteed by the European safety certificates

Moisture proof switch

Adjustable thermostat
- Adjustable thermostat with 4 temperature settings:
  - ANTIFREEZE protection
  - SUMMER mode
  - WINTER mode
  - ANTIBACTERIAL mode

Magnesium anode with 3 years of useful life + Anode tester
- TESY Base Line electric storage water heaters are equipped with Anode tester which is a helpful device showing the real condition of the anode and the necessity of its replacement. The magnesium anode protects the water heater tank from electrochemical corrosion.

Anti-freeze protection

> All models are equipped with anti-freezing protection, thermal cut off and light indicator Switch ON/OFF.

A03 TS

A03 TSR

A04 TSRA

TESY
the comfort generation

1> Thermoindicator
2> Outgoing stainless steel outlet
3> Glass-ceramic coating of the water tank
4> Magnesium anode with 3 years of useful life
5> Insulation of high density CFC Free polyurethane foam for minimum heat losses
6> Electric heating element
7> Incoming cold-water diffuser
8> Flange allowing easy replacement of the magnesium anode and the heating element
9> Models with Capillary and Stem thermostat
10> Moisture-proof switch
11> Safety valve

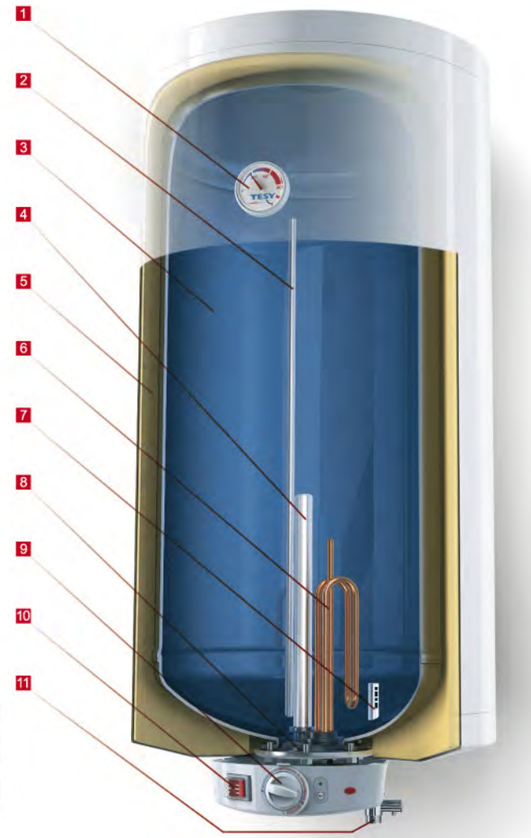

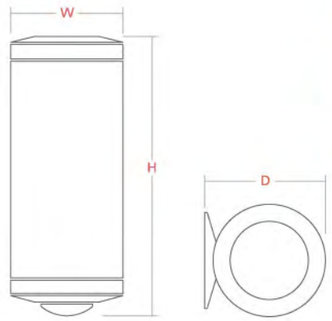

TESY water heaters are produced by the latest modern technology of glass-ceramic coating of the water tank. The glass-ceramic protection assures reliable protection against corrosion together with perfect hygiene of the water and guarantees long useful life of the water tank.

The capillary thermostat is a high-class component for the most precise regulation of the hot-water temperature providing high reliability of the working process of TESY water heaters. A special sensor of the capillary thermostat, fitted higher in the water heater tank controls the temperature, thus the precise control, safety and user satisfaction are achieved (Only for Premium line with mechanical control and Base Line A04).

Ensures precise control regulating the water temperature by sensor, fitted higher in the water heater tank. RTS PLUS ensures high safety of the water heater's working process and brings functional advantages to TESY water heaters performance.

The water tank of TESY storage water-heaters is produced with state-of-the-art automatic PLASMA WELDING technology – a process of fusing two metals using no extra materials. This technology ensures homogeneous structure of the completed seam, higher strength and resistance to mechanical load.

technical characteristics / transport norms

MODELS	Rated voltage	Rated power [W]	Installation	Capacity [liters]	Diameter [mm]	Working pressure	Protection of the tank	Insulation [mm]	Switch ON/OFF	Thermo-indicator	Safety valve	Product dimensions [m] H	W	D	Weight (net) [kg]	Truck 86 m³ [pcs]	Truck 116 m³ [pcs]	1x20' cnt. [pcs]	1x40' HC cnt. [pcs]
GCV 3036 12 A03/A04	230V~50Hz	1200	Vertical	30	353	0.8 MPa	Glass ceramic	18	+	+	+	0.520	0.350	0.370	11.80	866	1164	280	687
GCV 5036 15 A03/A04	230V~50Hz	1500	Vertical	50	353	0.8 MPa	Glass ceramic	18	+	+	+	0.790	0.350	0.370	17.70	594	780	168	447
GCV 6036 15 A03/A04	230V~50Hz	1500	Vertical	60	353	0.8 MPa	Glass ceramic	18	+	+	+	0.920	0.350	0.370	19.50	495	675	155	420
GCV 8036 15 A03/A04	230V~50Hz	1500	Vertical	80	353	0.8 MPa	Glass ceramic	18	+	+	+	1.130	0.350	0.370	23.30	396	534	140	298
GCV 5045 15 A03/A04	230V~50Hz	1500	Vertical	50	440	0.8 MPa	Glass ceramic	18	+	+	+	0.550	0.440	0.460	17.60	540	760	175	400
GCV 6045 15 A03/A04	230V~50Hz	1500	Vertical	60	440	0.8 MPa	Glass ceramic	18	+	+	+	0.650	0.440	0.460	18.20	455	620	145	390
GCV 8045 15 A03/A04	230V~50Hz	1500	Vertical	80	440	0.8 MPa	Glass ceramic	18	+	+	+	0.780	0.440	0.460	21.35	382	580	120	300
GCV 10045 20 A03/A04	230V~50Hz	2000	Vertical	100	440	0.8 MPa	Glass ceramic	18	+	+	+	0.930	0.440	0.460	24.00	326	460	96	200
GCV 12045 20 A03/A04	230V~50Hz	2000	Vertical	120	440	0.8 MPa	Glass ceramic	18	+	+	+	1.080	0.440	0.460	28.00	270	370	96	200
GCV 15045 20 A03/A04	230V~50Hz	2000	Vertical	150	440	0.8 MPa	Glass ceramic	18	+	+	+	1.300	0.440	0.460	33.50	191	370	60	150

The design and the technical data specified in the catalogue are subject of change without notice.

CE

TESY
the comfort generation

Dry heating element

2 degree switch

Noiseless heating

Lower scale deposit

BASE Line
Electric storage water heaters with dry heating element

1> **Thermoindicator**
2> **Outgoing stainless steel outlet**
3> **Glass-ceramic coating of the water tank**
4> **Insulation of high density CFC free polyurethane foam for minimum heat losses**
5> **Glass-ceramic coated protective sleeve**
6> **Magnesium anode with 3 years of useful life**
7> **Electric dry heating element**
8> **Incoming cold-water diffuser**
9> **Flange allowing easy replacement of the magnesium anode and the heating element**
10> **Capillary thermostat**
11> **Moisture-proof switch**
12> **Safety valve**

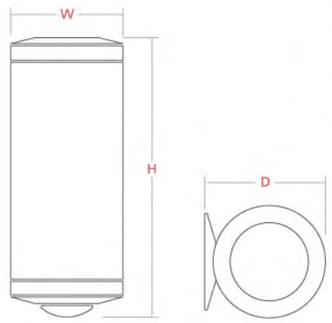

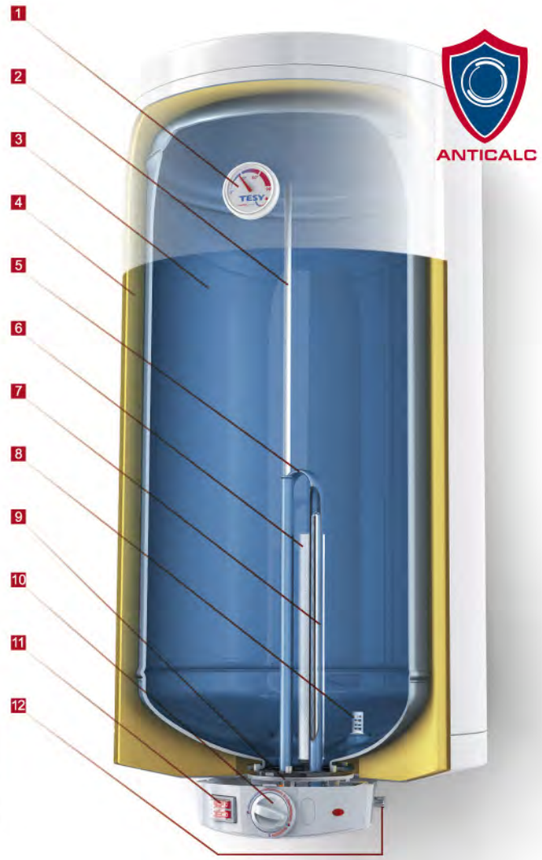

glass ceramic protection

CAPILLARY THERMOSTAT

PLASMA welding

Dry heating element ANTICALC
- The heating element hasn`t got contact with water. The technology ensures long life of the water heater because the electrical parts, the tank and the thermostat have better protection.

Advantages
- Easy and quick maintenance
- Low watt density (4 – 5 W per cm²) ensuring
  - Lower scale deposit
  - Noiseless heating process
- Avoiding water heater drain off when the heating element needs replacement
- Stainless steel heating element with glass-ceramic coated protective sleeve

technical characteristics / transport norms

MODELS	Rated voltage	Rated power [W] Max.	Rated power [W] Min.	Insta-llation	Capacity [liters]	Diame-ter [mm]	Working pressure	Protec-tion of the tank	Insu-lation [mm]	Safety valve	2 degree switch ON/OFF	Thermo-indicator	Heating time on Max. or Min. power setting Δt 50K (65-15) Max. 1600 W or 2400 W (2x800 W or 2x1200W)	Heating time Min. 800 W or 1200 W	Product dimensions [m] H	W	D	Weight (net) [kg]	Truck 86 m³ [pcs]	Truck 116 m³ [pcs]	1x20' cnt. [pcs]	1x40' HC cnt. [pcs]
GCV 3036 16D A04	230V~50Hz	1600	800	Vertical	30	353	0.8 MPa	Glass ceramic	18	+	+/-	+	1h 05min	2h 11min	0.520	0.350	0.370	12.3	866	1164	280	687
GCV 5036 16D A04	230V~50Hz	1600	800	Vertical	50	353	0.8 MPa	Glass ceramic	18	+	+/-	+	1h 49min	3h 38min	0.790	0.350	0.370	18.2	594	780	168	447
GCV 8036 24D A04	230V~50Hz	2400	1200	Vertical	80	353	0.8 MPa	Glass ceramic	18	+	+/-	+	1h 56min	3h 52min	1.130	0.350	0.370	23.9	396	534	140	298
GCV 5045 16D A04	230V~50Hz	1600	800	Vertical	50	440	0.8 MPa	Glass ceramic	18	+	+/-	+	1h 49min	3h 38min	0.550	0.440	0.460	17.6	540	760	175	400
GCV 8045 24D A04	230V~50Hz	2400	1200	Vertical	80	440	0.8 MPa	Glass ceramic	18	+	+/-	+	1h 56min	3h 52min	0.780	0.440	0.460	21.8	382	580	120	300
GCV 10045 24D A04	230V~50Hz	2400	1200	Vertical	100	440	0.8 MPa	Glass ceramic	18	+	+/-	+	2h 25min	4h 50min	0.930	0.440	0.460	25.0	326	460	96	200
GCV 12045 24D A04	230V~50Hz	2400	1200	Vertical	120	440	0.8 MPa	Glass ceramic	18	+	+/-	+	2h 54min	5h 48min	1.080	0.440	0.460	29.3	270	370	96	200
GCV 15045 24D A04	230V~50Hz	2400	1200	Vertical	150	440	0.8 MPa	Glass ceramic	18	+	+/-	+	3h 38min	7h 15min	1.300	0.440	0.460	34.8	191	370	60	150

The design and the technical data specified in the catalogue are subject of change without notice.

CE

Electric storage water heaters
BASE Line
Vertical models with serpentine

Serpentine

Flange

Moisture-proof switch

Adjustable thermostat

High efficient thermo-insulation

Serpentine
- Economic, effective and reliable hot water heat exchanger, designed for connection to local or other heating installation with forced circulation heating system (closed type).

Glass-ceramic protection of the water tank
- TESY electric storage water heaters are produced by the latest modern technology of glass-ceramic coating of the water tank. The glass-ceramic protection assures reliable protection against corrosion together with perfect hygiene of the water and guarantees long useful life of the water tank.

Adjustable thermostat
- Adjustable thermostat with 4 temperature settings
  - ANTIFREEZE protection
  - SUMMER mode
  - WINTER mode
  - ANTIBACTERIAL mode

Positioning of the INLET/OUTLET of the serpentine
- TESY electric storage water heaters are offered in two modifications depending on the position of the INLET/OUTLET of the serpentine
  - Left position – GCV6/9SL
  - Right position – GCV6/9S

Magnesium anode with 3 years of useful life
- TESY BASE Line electric storage water heaters are equipped with magnesium anode, which protects the water heater tank from electrochemical corrosion.

Moisture-proof switch

Flange
- Allowing free access to the electric group of the water heater so that the anode and the heating element can be easily replaced.

High efficient thermo-insulation
- Efficient thermo-insulation from high density CFC-free polyurethane with 18 mm thickness guarantees minimum heat losses and energy saving operation.

BASE Line with two integrated heat exchangers

BASE Line with one heat exchanger

TESY the comfort generation

Electric storage water heaters BASE Line
Vertical models with serpentine

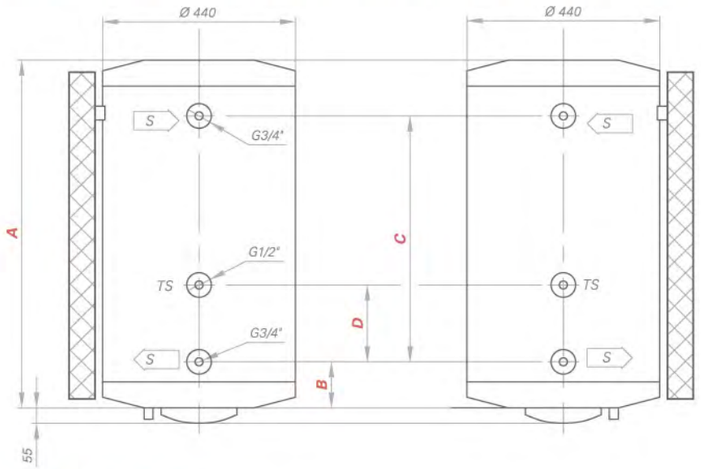

BASE Line with one heat exchanger

BASE Line with two integrated heat exchangers

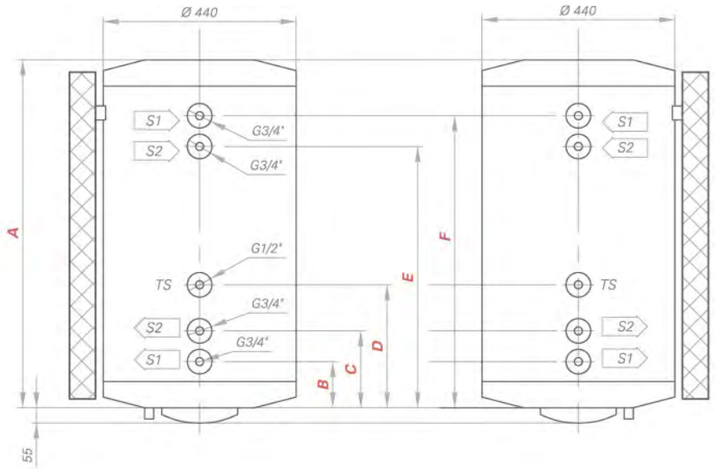

technical characteristics

MODELS with one heat exchanger	Rated voltage	Rated power [W]	Installation	Capacity [liters]	Diameter [mm]	Working pressure	Protection of the tank	Inlet/Outlet of the Heat Exchanger	Insulation [mm]	Thermo-indicator	Safety valve	Thermowell	Heat exchanger Surface [m²] Output [kW] *60-80°C	Product dimensions [m] H	W	D	Weight (net) [kg]	Dimensions [mm, ±5] A	B	C	D
GCVS 8045 20 A03 TSR	230V~50Hz	2000	Vertical	80	440	0.8 MPa	Glass ceramic	3/4"	18	+	+	-	0.21/5.50	0.780	0.440	0.460	24.30	729	182	360	-
GCVS 10045 20 A03 TSR	230V~50Hz	2000	Vertical	100	440	0.8 MPa	Glass ceramic	3/4"	18	+	+	-	0.28/6.23	0.930	0.440	0.460	28.40	876	182	480	-
GCVS 12045 20 A03 TSRP	230V~50Hz	2000	Vertical	120	440	0.8 MPa	Glass ceramic	3/4"	18	+	+	1 pc	0.28/6.23	1.080	0.440	0.460	32.50	1025	182	480	150
GCVS 15045 20 A03 TSRP	230V~50Hz	2000	Vertical	150	440	0.8 MPa	Glass ceramic	3/4"	18	+	+	1 pc	0.28/6.23	1.300	0.440	0.460	38.00	1247	182	480	150
GCV6S 8045 20 A03 TSR	230V~50Hz	2000	Vertical	80	440	0.8 MPa	Glass ceramic	3/4"	18	+	+	-	0.47/10.6	0.780	0.440	0.460	29.20	729	182	295	-
GCV9S 10045 20 A03 TSR	230V~50Hz	2000	Vertical	100	440	0.8 MPa	Glass ceramic	3/4"	18	+	+	-	0.7/14.4	0.930	0.440	0.460	35.90	876	182	445	-
GCV9S 12045 20 A03 TSRP	230V~50Hz	2000	Vertical	120	440	0.8 MPa	Glass ceramic	3/4"	18	+	+	1 pc	0.7/14.4	1.080	0.440	0.460	38.80	1025	182	445	150
GCV9S 15045 20 A03 TSRP	230V~50Hz	2000	Vertical	150	440	0.8 MPa	Glass ceramic	3/4"	18	+	+	1 pc	0.7/14.4	1.300	0.440	0.460	44.30	1247	182	445	150

technical characteristics

MODELS with two integrated heat exchangers	Rated voltage	Rated power [W]	Installation	Capacity [liters]	Diameter [mm]	Working pressure	Protection of the tank	Inlet/Outlet of the Heat Exchanger	Insulation [mm]	Thermo-indicator	Safety valve	Thermowell	Heat exchangers Surface [m²] S1	S2	Product dimensions [m] H	W	D	Weight (net) [kg]	Heat exchangers Output [kW] *60-80°C S1	S2	Dimensions [mm, ±5] A	B	C	D	E	F
GCV7/4S2 10045 20 A03 TSRP	230V~50Hz	2000	Vertical	100	440	0.8 MPa	Glass ceramic	3/4"	18	+	+	1 pc	0.5	0.3	0.990	0.480	0.490	37.90	12.2	7.8	876	186	284	374	588	690
GCV7/4S2 12045 20 A03 TSRP	230V~50Hz	2000	Vertical	120	440	0.8 MPa	Glass ceramic	3/4"	18	+	+	1 pc	0.5	0.3	1.140	0.480	0.490	41.40	13.3	8.1	1025	186	284	374	588	690
GCV7/4S2 15045 20 A03 TSRP	230V~50Hz	2000	Vertical	150	440	0.8 MPa	Glass ceramic	3/4"	18	+	+	1 pc	0.5	0.3	1.360	0.480	0.490	47.00	14.8	8.5	1247	186	284	374	588	690

* incoming-outgoing thermo transfer fluid in the heat-exchanger

The design and the technical data specified in the catalogue are subject of change without notice.

transport norms

	TESY GCV7/ 4S2 10045 20A03 TSRP	TESY GCV7/ 4S2 12045 20 A03 TSRP	TESY GCV7/ 4S2 15045 20 A03 TSRP	TESY GCVS 804520 A03 TSR	TESY GCVS 1004520 A03 TSR	TESY GCVS 1204520 A03 TSRP	TESY GCVS 1504520 A03 TSRP	TESY GCV6S 804520 A03 TSR	TESY GCV9S 1004520 A03 TSR	TESY GCV9S 1204520 A03 TSRP	TESY GCV9S 1504520 A03 TSRP
Truck 86 m³ [pcs]	326	270	191	382	326	270	191	382	326	270	191
Truck 116 m³ [pcs]	460	370	370	580	460	370	370	580	460	370	370
1x20' cnt. [pcs]	96	96	60	120	96	96	60	120	96	96	60
1x40' HC cnt. [pcs]	200	200	150	300	200	200	150	300	200	200	150

CE

TESY
the comfort generation

Electric storage water heaters
BASE Line
Horizontal models

Adjustable thermostat

High efficient thermo-insulation

Magnesium anode

Moisture-proof switch

Horizontal installation
- Horizontal storage water heaters TESY are offered in two modifications – left (GCHL) and right (GCH) installation.

Glass-ceramic protection of the water tank
- TESY storage water heaters are produced by the latest modern technology of glass-ceramic coating of the water tank. The glass-ceramic protection assures reliable protection against corrosion together with perfect hygiene of the water and guarantees long useful life of the water tank.

Adjustable thermostat
- Adjustable thermostat with 4 temperature settings
  - ANTIFREEZE protection
  - SUMMER mode
  - WINTER mode
  - ANTIBACTERIAL mode

Magnesium anode with 3 years of useful life
- TESY BASE Line electric storage water heaters are equipped with magnesium anode, which protects the water heater tank from electrochemical corrosion.

Moisture-proof switch
- Reliable electric system, guaranteed by the European safety certificates. All models are equipped with thermometer and Safety valve.

Flange
- Allowing free access to the electric group of the water heater so that the anode and the heating element can be easily replaced.

High efficient thermo-insulation
- Efficient thermo-insulation from high density CFC-free polyurethane with 18 mm thickness guarantees minimum heat losses and energy saving operation.

glass ceramic protection

CAPILLARY THERMOSTAT

PLASMA welding

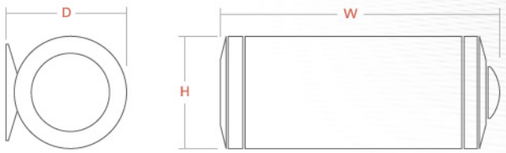

technical characteristics / transport norms

MODELS	Rated voltage	Rated power [W]	Installation	Capacity [liters]	Diameter [mm]	Working pressure	Protection of the tank	Insulation [mm]	Switch On/OFF	Thermo-indicator	Safety valve	Product dimensions [m] H	W	D	Weight (net) [kg]	Truck 86 m³ [pcs]	Truck 116 m³ [pcs]	1x20′ cnt. [pcs]	1x40′ HC cnt. [pcs]
GCH 8045 20 A03 TS	230V~50Hz	2000	Horizontal	80	440	0.8 MPa	Glass ceramic	18	+	+	+	0.440	0.780	0.460	21.50	400	570	115	290
GCH 10045 20 A03 TS	230V~50Hz	2000	Horizontal	100	440	0.8 MPa	Glass ceramic	18	+	+	+	0.440	0.930	0.460	24.70	335	450	90	240
GCH 8045 20 A04 TSR	230V~50Hz	2000	Horizontal	80	440	0.8 MPa	Glass ceramic	18	+	+	+	0.440	0.780	0.460	21.50	400	570	115	290

The design and the technical data specified in the catalogue are subject of change without notice.

CE

TESY
the comfort generation

Electric storage water heaters
BASE Line
Horizontal models with serpentine

Serpentine

Flange

Moisture-proof switch

Adjustable thermostat

High efficient thermo-insulation

Horizontal installation
- Horizontal electric storage water heaters TESY are designed for right (GCH) installation.

Glass-ceramic protection of the water tank
- TESY storage water heaters are produced by the latest modern technology of glass-ceramic coating of the water tank. The glass-ceramic protection assures reliable protection against corrosion together with perfect hygiene of the water and guarantees long useful life of the water tank.

Adjustable thermostat
- Adjustable thermostat with 4 temperature settings
  - ANTIFREEZE protection
  - SUMMER mode
  - WINTER mode
  - ANTIBACTERIAL mode

Magnesium anode with 3 years of useful life
- TESY BASE Line electric storage water heaters are equipped with magnesium anode, which protects the water heater tank from electrochemical corrosion.

Moisture-proof switch
- Reliable electric system, guaranteed by European safety certificates. All models are equipped with thermometer and Safety valve.

Flange
- Allowing free access to the electric group of the water heater so that the anode and the heating element can be easily replaced.

High efficient thermo-insulation
- High efficient thermo-insulation from high density CFC-free polyurethane with thickness 18 mm guarantees minimum heat losses and energy saving operation.

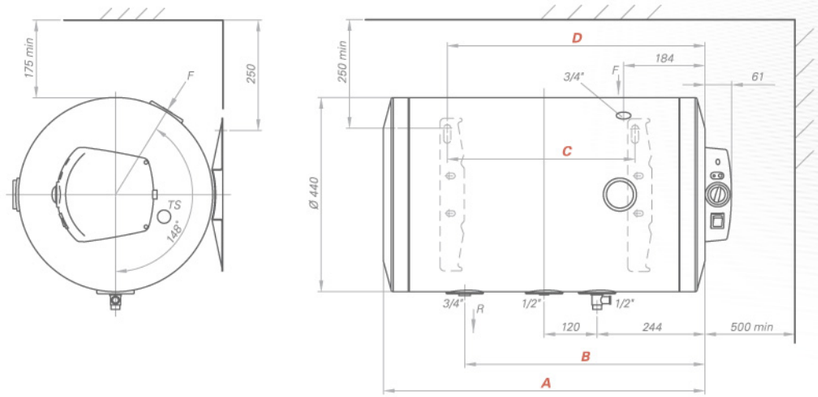

technical characteristics

MODELS	Rated voltage	Rated power [W]	Installation	Capacity [liters]	Diameter [mm]	Working pressure	Working pressure of the serpentine	Protection of the tank	Insulation [mm]	Inlet/Outlet of the heat exchanger	Thermo-indicator	Safety valve	Thermo-well	Heat exchanger surface [m²] / output [kW] *60-80°C	Dimensions [mm] A	B	C	D	Weight (net) [kg]	transport norms: Truck 86 m³ [pcs]	Truck 116 m³ [pcs]	1x20' cnt. [pcs]	1x40' HC cnt. [pcs]
GCHMS 8045 20/30 A04 TSR	230V~50Hz	2000/3000	Horizontal	80	440	0.8 MPa	0.6 MPa	Glass ceramic	18	3/4"	+	+	-	0.26/5.66	720	545	426	578	25.7	382	580	120	300
GCHMS 12045 20/30 A04 TSRP	230V~50Hz	2000/3000	Horizontal	120	440	0.8 MPa	0.6 MPa	Glass ceramic	18	3/4"	+	+	1 pc.	0.34/8.5	1030	696	716	888	33.3	280	400	90	210

* incoming-outgoing thermo transfer fluid in the heat-exchanger

The design and the technical data specified in the catalogue are subject of change without notice.

CE

TESY
the comfort generation

Small capacity electric storage water heaters COMPACT Line

Installation above the sink

Installation under the sink

ON/OFF switch

Adjustable thermostat

Metal flow regulating mixing tap (only for GCA 1015 K51 SRCM)

- **Compact size**
- **Glass-ceramic protection of the water tank**
- **Flange allowing easy maintenance of the water heater**
- **Functional and convenient control panel** - switch ON/OFF and adjustable thermostat
- **Light indicators**
- **Safety valve**
- **Stainless steel water inlet and outlet**

Model TESY GCA 1015 K51 SRCM
- Model GCA 1015 K51 SRCM is equipped with special metal flow regulating mixing tap which ensures constant connection of the water tank with the atmosphere, the appliance doesn't work under pressure and there is no necessity of safety valve.

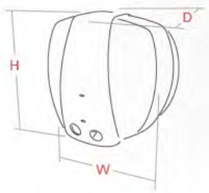

glass ceramic protection

CAPILLARY THERMOSTAT

technical characteristics / transport norms

MODELS	Rated voltage	Rated power [W]	Installation	Capacity [liters]	Working pressure	Protection of the tank	Insulation [mm]	Safety valve	Heating time from 15°C to 65°C	Product dimensions [m] H	W	D	Weight / with accessories (net) [kg]		Truck 86 m³ [pcs]	Truck 116 m³ [pcs]	1x20' cnt. [pcs]	1x40' HC cnt. [pcs]
GCA 1015 K51 SRC	230V~50Hz	1500	Above the sink	10	0.8 MPa	Glass ceramic	19	+	23 min	0.410	0.370	0.250	6.50	Master box (3 pcs in MB)	1750	2350	670	1550
GCU 1015 K51 SRC	230V~50Hz	1500	Under the sink	10	0.8 MPa	Glass ceramic	19	+	23 min	0.410	0.370	0.250	6.50	Master box (3 pcs in MB)	1750	2350	670	1550
GCA 1515 K51 SRC	230V~50Hz	1500	Above the sink	15	0.8 MPa	Glass ceramic	19	+	35 min	0.410	0.370	0.310	8.50	Master box (2 pcs in MB)	1400	1900	540	1250
GCU 1515 K51 SRC	230V~50Hz	1500	Under the sink	15	0.8 MPa	Glass ceramic	19	+	35 min	0.410	0.370	0.310	8.50	Master box (2 pcs in MB)	1400	1900	540	1250
GCA 1015 K51 SRCM	230V~50Hz	1500	Above the sink	10	0 MPa (non pressurized)	Glass ceramic	19	-	23 min	0.410	0.370	0.250	6.50 / 7.20	Master box (3 pcs in MB)	1750	2350	670	1550

The design and the technical data specified in the catalogue are subject of change without notice.

CE

TESY
the comfort generation

Unlimited amount of hot water

3 power settings
(only for TESY Yunga 06KI)

Stainless steel heating element

Safety thermostat

Easy and space saving installation

Metal flow regulating mixing tap

Power cord with plug included
(only for TESY Yunga 035KI)

Instantaneous electric water heaters
TESY Yunga

- **Metal flow regulating mixing tap** *(available for TESY Yunga 035 KI, TESY Yunga 06 KI models)*
  - Metal flow regulating mixing tap which allows easy and space saving installation and comfortable mix-up of hot and cold water. The appliance has to be mounted directly to the mixing tap without necessity of wall mounting.
- **Power cord with plug** *(only for TESY Yunga 035 KI)*
  - The appliance is equipped with power cord with plug which allows fast and comfortable connection to the electrical network.
- **Three power settings** *(available for TESY Yunga 06 KI model)*
  - The convenient switches with light indication allow easy switching over to higher or lower power setting of the appliance.

TESY Yunga 035 KI

TESY Yunga 06 KI

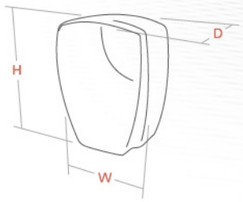

technical characteristics / **transport norms**

MODELS	Rated voltage	Rated power [W] Max.	Mid.	Min.	Usage	Flow rate (Δt 25°C)	Installation	Working pressure	Diameter INLET/ OUTLET	Recommended Fuse Rating	Recommended cable size	Accessories kit	Product dimensions [m] H	W	D	Weight (net) [kg]	Master box (pcs in MB)	Truck 86 m³ [pcs]	Truck 116 m³ [pcs]	1x20′ cnt. [pcs]	1x40′ HC cnt. [pcs]
TESY Yunga 035 KI	220-230V~50Hz	3500			Kitchen	2 l/min	Non pressurized	0 MPa	1/2″	16 A	4 mm²	Metal flow regulating mixing tap	0.250	0.180	0.110	1.67	-	6930	-	-	-
TESY Yunga 06 KI	220-230V~50Hz	6000	3500	2500	Kitchen	3.4 l/min	Non pressurized	0 MPa	1/2″	32 A	4 mm²	Metal flow regulating mixing tap	0.250	0.180	0.110	1.84	-	6930	-	-	-

The design and the technical data specified in the catalogue are subject of change without notice.

CE

Instantaneous water heaters TESY

Unlimited amount of hot water

Constant temperature

Control panel

Adjustable shower head with 4 spray settings (only for COMBI and HOLDER models)

Stainless steel heating element

Easy and space saving installation

- **Unlimited amount of hot water**
- **3 power settings**
- **Safety thermostat**
- **Self-resetting safety valve**
- **Stainless steel heating element**
- **Light indicators**
- **Stylish and ergonomic accessories**
- **Compact size, easy and space saving installation**
- **Safety class – IP35**
  - Model in-line – this model works under pressure (max.06 MPa) and can supply hot water to more than two outlet points
- **Adjustable shower head with 4 spray settings**
  - Advanced shower head allows 4 spray settings for best personal adjustment together with fine-stream spray-heads for comfortable use.

Instantaneous water heaters TESY

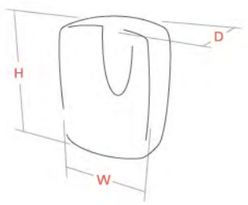

technical characteristics / transport norms

MODELS	Rated voltage	Rated power [W] Max.	Mid.	Min.	Usage	Flow rate (Δt 25°C)	Installation	Working pressure	Diameter INLET/ OUTLET	Recommended Fuse Rating	Recommended cable size	Accessories kit	Product dimensions [m] H	W	D	Weight (net) [kg]	Truck 86 m³ [pcs]	Truck 116 m³ [pcs]	1x20' cnt. [pcs]	1x40' HC cnt. [pcs]
IWH 07 Z01 CO	230V~50Hz	7000	4000	3000	Bathroom	4.0 l/min	Non pressurized	0 MPa	1/2"	40	6 mm²	Accessories for Kitchen, shower head, connective hose and shower head holder	0.400	0.205	0.200	2.99	4750	6090	1460	3350
IWH 07 Z01 BAH	230V~50Hz	7000	4000	3000	Bathroom	4.0 l/min	Non pressurized	0 MPa	1/2"	40	6 mm²	Shower head holder and connective hose	0.290	0.205	0.200	2.50	6560	8400	2010	4620
IWH 05 Z01 KI	230V~50Hz	5000	3000	2000	Kitchen	2.9 l/min	Non pressurized	0 MPa	1/2"	25	4 mm²	Accessories for Kitchen	0.290	0.205	0.200	1.93	6560	8400	2010	4620
IWH 07 Z01 IL	230V~50Hz	7000	4000	3000	Universal	4.0 l/min	Non pressurized	0.6 MPa	1/2"	40	6 mm²	-	0.290	0.205	0.200	1.76	6560	8400	2010	4620

The design and the technical data specified in the catalogue are subject of change without notice.

TESY

the comfort generation

TESY Ltd.
Head office: Bulgaria, Sofia Park, Building 16V, Office 2.1, 2 Floor, 1715 Sofia
Phones: (+359 2) 902 66 66; 902 60 00, Fax: (+359 2) 902 66 60
e-mail: office@tesy.com